ALARM CONCENTRATORS AND TEMPERATURE CONTROL UNIT

contrel elettronica

ITALIAN DESIGN

FIRE
PUSH IN
PULL DOWN

Alarm concetrators and temperature control units

Index | Page

Temperature control units 56
Webserver for temperature control units 57
Luminous indicators 58
Alarm concentrators 59
Flag relays 63
Rack alarm concentrators 64
SQ panel indicators 65
Devices for control and supervision through WiFi and cellular connections 65
Expansion modules 66

Dimensions 67
Wiring diagrams 69
Alarm sequences 72

TEMPERATURE CONTROL UNITS

Certification obtained: **EAC**
Compliant with standards: **EN 61000-6-2:2006, EN 61000-6-4, EN 61010-1**

See dimensions and wiring diagrams at the end of chapter

CTT-4

CTT-8

TYPE		RATED AUXILIARY SUPPLY VOLTAGE	ORDER CODE	PCS	WT
CTT-4	• 4 PT100 RTD (not included) • Flush mount • Double level of intervention. • Programmable relay outputs. • Doppio display a 3 digit.	115-230-400 VAC	**3TT10P**	1	0,800
		24÷230 VAC/DC	**3TT10Y**		
CTT-4-485	• 4 PT100 RTD (not included) • Flush mount. • Double level of intervention. • Programmable relay outputs. • Doppio display a 3 digit. • RS485.	115-230-400 VAC	**3TT12P**		
		24÷230 VAC/DC	**3TT12Y**		
CTT-4-485-AO	• 4 PT100 RTD (not included) • Flush mount. • Double level of intervention.• Programmable relay outputs. • Doppio display a 3 digit. • Analog ouput 0/4...20mA. • RS485.	115-230-400 VAC	**3TT16P**		
		24÷230 VAC/DC	**3TT16Y**		
CTT-4-4AO	• 4 PT100 RTD (not included) • Flush mount. • Double level of intervention.• Programmable relay outputs. • Doppio display a 3 digit. • 4 Analog ouputs 0/4...20mA.	115-230-400 VAC	**3TT24P**		
		24÷230 VAC/DC	**3TT24Y**		
CTT-4-485-4AO	• 4 PT100 RTD (not included) • Flush mount. • Double level of intervention.• Programmable relay outputs. • Doppio display a 3 digit. • 4 Analog ouputs 0/4...20mA. • RS485.	115-230-400 VAC	**3TT25P**		
		24÷230 VAC/DC	**3TT25Y**		
CTT-8	• 8 PT100 RTD (not included) • Flush mount. • Double level of intervention. • Programmable relay outputs. • Doppio display a 3 digit.	115-230-400 VAC	**3TT11P**		
		24÷230 VAC/DC	**3TT11Y**		
CTT-8-485	• 8 PT100 RTD (not included) • Flush mount. • Double level of intervention. • Programmable relay outputs. • Doppio display a 3 digit. • RS485.	115-230-400 VAC	**3TT13P**		
		24÷230 VAC/DC	**3TT13Y**		
CTT-8-485-AO	• 8 PT100 RTD (not included) • Flush mount. • Double level of intervention. • Programmable relay outputs. • Doppio display a 3 digit. • Analog ouput 0/4...20mA. • RS485.	115-230-400 VAC	**3TT17P**		
		24÷230 VAC/DC	**3TT17Y**		

GENERAL CHARACTERISTICS

- Display of instantaneous and maximum temperature
- Input sensor
  - 4 PT100 RTD (CTT-4 only)
  - 8 PT100 RTD (CTT-8 only)
- Double level of intervention for each channel: alarm and trip
- Red LED indicator for ALARM threshold intervention
- Red LED indicator for TRIP threshold intervention
- Measuring Range -30...+200 °C
- Tripping delay 5 sec
- Self-diagnostic function for anomalies or incorrect installation (FAULT)
- FDC function for automatic control of the temperature deviation within a defined time period
- Possibility of activating forced ventilation (FAN)
- Configurable automatic or manual resetting
- 4 programmable relay outputs for any anomaly or fault condition
- Analog output 0/4...20mA
- Communication interface RS485
- Communication protocol Modbus-RTU
- Communication protocol IEC 61850 international standard for communication in substations (CTT-4 only)
- Flush mount 96x96mm housing
- Degree of protection: IP20 terminals, IP52 on front

WEBSERVER FOR TEMPERATURE CONTROL UNITS CTT SERIE

Certification obtained: **EAC**
Compliant with standards: **EN 61010-1, EN 61000-6-2, EN 61000-6-3**

See dimensions and wiring diagrams at the end of chapter

EMI-10T

TYPE		RATED AUXILIARY SUPPLY VOLTAGE	ORDER CODE	PCS	WT
EMI-10T	The EMI-10T converter allows CTT devices connected on an RS485 network to interface with a "Master" with Ethernet port: • 10/100 Mbps ETHERNET interface • programming via web interface • protocol conversion between Modbus RTU and Modbus TCP • data logging • device remote management, values readout, alarm management	230 VAC	**3IC55G**	1	0,300
		24-48 VAC/DC	**3IC55J**	1	0,300

GENERAL CHARACTERISTICS

- Modular DIN-rail housing, 3U
- 10/100Mbit ETHERNET interface
- Protocol conversion between modbus rtu and modbus tcp
- 2 color LED for the communication status
- RS485 serial interface
- Web interface for configuration and remote management
- Protocol supported: Modbus TCP, HTTP
- Log-in with a password

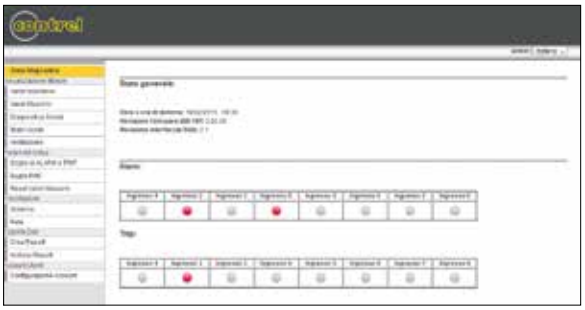

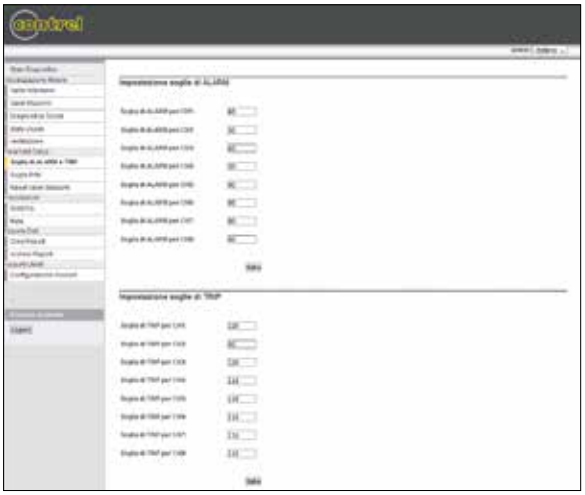

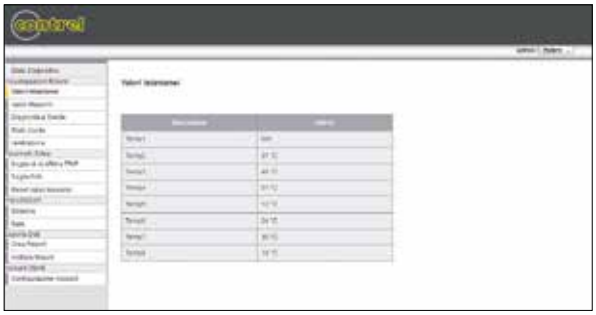

LUMINOUS INDICATORS

Certification obtained: **EAC**
Compliant with standards: **EN 61000-6-2, EN 61000-6-4, EN 61010-1**

See dimensions and wiring diagrams at the end of chapter

C0.3/sq3
3 LED

C0.4/sq4
4 LED

C2/sq
12 LED

C3/sq
12 LED

TYPE		RATED AUXILIARY SUPPLY VOLTAGE	ORDER CODE	PCS	WT Kg
C0.3/sq	• Luminous indicator with 3 LEDs and neutral plate • Flush mount 48x48mm housing	24VAC/DC	**3C070J**	1	0,050
		48VAC/DC	**3C070K**		
		115VAC	**3C070E**		
		115VDC	**3C070F**		
		230VAC	**3C070G**		
C0.4/sq	• Luminous indicator with 4 LEDs and neutral plate • Flush mount 48x48mm housing	24VAC/DC	**3C071J**		
		48VAC/DC	**3C071K**		
		115VAC	**3C071E**		
		115VDC	**3C071F**		
		230VAC	**3C071G**		
C2/sq	• Luminous indicator with 12 LEDs and neutral plate • Flush mount 96x96mm housing	24VAC/DC	**3C065J**	1	0,200
		48VAC/DC	**3C065K**		
		115VAC	**3C065E**		
		115VDC	**3C065F**		
		230VAC	**3C065G**		
	• Luminous indicator with 12 LEDs and neutral plate with lamp test button on the front • Flush mount 96x96mm housing	24VAC/DC	**3C0651J**		
		115VDC	**3C0651F**		
C3/sq	• Luminous indicator with 12 LEDs and neutral plate • Flush mount 72x144mm housing	24VAC/DC	**3C045J**	1	0,200
		48VAC/DC	**3C045K**		
		115VAC	**3C045E**		
		115VDC	**3C045F**		
		230VAC	**3C045G**		
ACCESSORIES FOR LUMINOUS INDICATORS					
Red LED			**LED-RED**	-	-
Green LED			**LED-GREEN**		
Yellow LED			**LED-YELLOW**		
Blue LED			**LED-BLUE**		
White LED			**LED-WHITE**		

GENERAL CHARACTERISTICS

They are supplied in versions from 3 to 12 interchangeable LEDs with different power supply voltages; they provide the luminous signaling of the events that occur in the system (eg alarms, status indications, etc.).

All the versions in the range are provided with pre-printed description plates in Italian and English and with customizable neutral plates. With the accessories it is possible to configure the product according to specific needs, choosing the color of the LEDs.

ALARM CONCENTRATORS

Certification obtained: **EAC**
Compliant with standards: **EN 61000-6-2:2006, EN 61000-6-4, EN 61010-1**

See dimensions and wiring diagrams at the end of chapter

Compalarm D2

Compalarm D2m

TYPE		RATED AUXILIARY SUPPLY VOLTAGE	VOLTAGE INPUTS	ORDER CODE	PCS	WT
Compalarm D2	• Alarm concentrator. • Graphic LCD display. • 16 alarms. • Flush mount 96x96mm housing • Calendar clock, built-in buzzer. • Programmable outputs. • RS485 port.	90÷250 VAC/DC	24 VAC/DC	**3CD711S**	1	0,500
		20÷60 VAC/DC	24 VAC/DC	**3CD711N**		
		90÷250 VAC/DC	48 VAC/DC	**3CD712S**		
		20÷60 VAC/DC	48 VAC/DC	**3CD712N**		
		90÷250 VAC/DC	115 VAC/DC	**3CD713S**		
		20÷60 VAC/DC	115 VAC/DC	**3CD713N**		
		90÷250 VAC/DC	230 VAC/DC	**3CD714S**		
		20÷60 VAC/DC	230 VAC/DC	**3CD714N**		
Compalarm D2-Eth	• Alarm concentrator. • Graphic LCD display. • 16 alarms. • Flush mount 96x96mm housing • Calendar clock, built-in buzzer. • Programmable outputs. • RS485 port and ethernet port for Modbus TCP/IP.	90÷250 VAC/DC	24 VAC/DC	**3CD721S**		
		20÷60 VAC/DC	24 VAC/DC	**3CD721N**		
		90÷250 VAC/DC	48 VAC/DC	**3CD722S**		
		20÷60 VAC/DC	48 VAC/DC	**3CD722N**		
		90÷250 VAC/DC	115 VAC/DC	**3CD723S**		
		20÷60 VAC/DC	115 VAC/DC	**3CD723N**		
		90÷250 VAC/DC	230 VAC/DC	**3CD724S**		
		20÷60 VAC/DC	230 VAC/DC	**3CD724N**		
Compalarm D2m	• Alarm concentrator. • LCD display 4 row x 20 chars. • 16 alarms. • Modular DIN-rail housing, 6U • Calendar clock, built-in buzzer. • Programmable outputs. • RS485 port.	90÷250 VAC/DC	24 VAC/DC	**3CD811S**	1	0,450
		20÷60 VAC/DC	24 VAC/DC	**3CD811N**		
		90÷250 VAC/DC	48 VAC/DC	**3CD812S**		
		20÷60 VAC/DC	48 VAC/DC	**3CD812N**		
		90÷250 VAC/DC	115 VAC/DC	**3CD813S**		
		20÷60 VAC/DC	115 VAC/DC	**3CD813N**		
		90÷250 VAC/DC	230 VAC/DC	**3CD814S**		
		20÷60 VAC/DC	230 VAC/DC	**3CD814N**		
Compalarm D2m-Eth	• Alarm concentrator. • LCD display 4 row x 20 chars. • 16 alarms. • Modular DIN-rail housing, 6U • Calendar clock, built-in buzzer. • Programmable outputs. • RS485 port and ethernet port for Modbus TCP/IP.	90÷250 VAC/DC	24 VAC/DC	**3CD821S**		
		20÷60 VAC/DC	24 VAC/DC	**3CD821N**		
		90÷250 VAC/DC	48 VAC/DC	**3CD822S**		
		20÷60 VAC/DC	48 VAC/DC	**3CD822N**		
		90÷250 VAC/DC	115 VAC/DC	**3CD823S**		
		20÷60 VAC/DC	115 VAC/DC	**3CD823N**		
		90÷250 VAC/DC	230 VAC/DC	**3CD824S**		
		20÷60 VAC/DC	230 VAC/DC	**3CD824N**		

GENERAL CHARACTERISTICS

The Compalarm D2 / D2m alarm concentrators are used to inform the operator that a process has gone beyond the set limits using a visual and audible alarm. The availability of numerous operating modes in a single product allows the concentrators to be installed in the most diverse application situations, for example alarm indicators, PLC / PC message displays, remote terminals, status / diagnosis indicators, human-machine interfaces , supervision and control equipment.

- 16 alarm inputs
- Backlight LCD display with multilingual text
- Alarm condition signaling LED
- N.O. or N.C. input configuration
- Configurable automatic or manual resetting
- Built-in buzzer
- Integrated calendar clock
- Storage of the latest events
- Programmable outputs for any alarm condition
- Configurable fail safe operation
- Communication interface RS485
- Modbus-RTU communication protocol
- Ethernet communication interface
- Modbus-TCP/IP communication protocol
- Programming via free downloadable software
- Flush mount 96x96mm housing (Compalarm D2)
- Modular DIN-rail housing, 6U (Compalarm D2m)
- Degree of protection: IP20 terminals, IP40 on front

ALARM CONCENTRATORS

Certification obtained: **EAC, RINA**
Compliant with standards: **EN 61000-6-2:2006, EN 61000-6-4, EN 61010-1**

See dimensions and wiring diagrams at the end of chapter

Ordering example for codes with specific certification:

3COMPE100050000

Certification

0 = standard
1 = RINA

Compalarm E

EXPANSION MODULES – INPUTS / OUTPUTS	
MR-R8	External expansion 6 DIN modules, 8 relay outputs
MR-DI16	External expansion 6 DIN modules, 16 dig. inputs

TYPE		RATED AUXILIARY SUPPLY VOLTAGE	VOLTAGE INPUTS	ORDER CODE	PCS	WT
Compalarm E	• Alarm concentrator. • TFT color display. • 16 alarms. • Flush mount 96x96mm housing • Calendar clock, built-in buzzer. • Programmable outputs. • RS485 port.	90÷250 VAC/DC	24 VAC/DC	**3COMPE000000000**	1	0,450
		20÷60 VAC/DC	24 VAC/DC	**3COMPE010000000**		
		90÷250 VAC/DC	48 VAC/DC	**3COMPE000100000**		
		20÷60 VAC/DC	48 VAC/DC	**3COMPE010100000**		
		90÷250 VAC/DC	115 VAC/DC	**3COMPE000200000**		
		20÷60 VAC/DC	115 VAC/DC	**3COMPE010200000**		
		90÷250 VAC/DC	230 VAC/DC	**3COMPE000300000**		
		20÷60 VAC/DC	230 VAC/DC	**3COMPE010300000**		
Compalarm E-Eth	• Alarm concentrator. • TFT color display. • 16 alarms. • Flush mount 96x96mm housing • Calendar clock, built-in buzzer. • Programmable outputs. • RS485 port and ethernet port for Modbus TCP/IP.	90÷250 VAC/DC	24 VAC/DC	**3COMPE000050000**		
		20÷60 VAC/DC	24 VAC/DC	**3COMPE010050000**		
		90÷250 VAC/DC	48 VAC/DC	**3COMPE000150000**		
		20÷60 VAC/DC	48 VAC/DC	**3COMPE010150000**		
		90÷250 VAC/DC	115 VAC/DC	**3COMPE000250000**		
		20÷60 VAC/DC	115 VAC/DC	**3COMPE010250000**		
		90÷250 VAC/DC	230 VAC/DC	**3COMPE000350000**		
		20÷60 VAC/DC	230 VAC/DC	**3COMPE010250000**		
Compalarm E-2-485	• Alarm concentrator. • TFT color display. • 16 alarms. • Flush mount 96x96mm housing • Calendar clock, built-in buzzer. • Programmable outputs. • 2 RS485 ports.	90÷250 VAC/DC	24 VAC/DC	**3COMPE000010000**		
		20÷60 VAC/DC	24 VAC/DC	**3COMPE010010000**		
		90÷250 VAC/DC	48 VAC/DC	**3COMPE000110000**		
		20÷60 VAC/DC	48 VAC/DC	**3COMPE010110000**		
		90÷250 VAC/DC	115 VAC/DC	**3COMPE000210000**		
		20÷60 VAC/DC	115 VAC/DC	**3COMPE010210000**		
		90÷250 VAC/DC	230 VAC/DC	**3COMPE000310000**		
		20÷60 VAC/DC	230 VAC/DC	**3COMPE010310000**		
Compalarm E-2-485-Eth	• Alarm concentrator. • TFT color display. • 16 alarms. • Flush mount 96x96mm housing • Calendar clock, built-in buzzer. • Programmable outputs. • 2 RS485 ports and ethernet port for Modbus TCP/IP.	90÷250 VAC/DC	24 VAC/DC	**3COMPE000080000**		
		20÷60 VAC/DC	24 VAC/DC	**3COMPE010080000**		
		90÷250 VAC/DC	48 VAC/DC	**3COMPE000180000**		
		20÷60 VAC/DC	48 VAC/DC	**3COMPE010180000**		
		90÷250 VAC/DC	115 VAC/DC	**3COMPE000280000**		
		20÷60 VAC/DC	115 VAC/DC	**3COMPE010280000**		
		90÷250 VAC/DC	230 VAC/DC	**3COMPE000380000**		
		20÷60 VAC/DC	230 VAC/DC	**3COMPE010380000**		

GENERAL CHARACTERISTICS

The Compalarm E alarm annunciator is used to inform the operator that a process has gone beyond set limits using a visual and audible alarms.
The TFT color display offers a user-friendly interface, which can be set the number of cells required to suit individual panel designs. It's possible to set different display window types: small, medium, large window, icon style, alarms group version. The rich variety of functions, makes the annunciator the ideal choice for a wide range of applications.
The Compalarm E is also provided with a RS-485 interface with Modbus protocol to consent the integration in supervision systems.

- 16 alarm inputs
- TFT color display 3.5" with multilingual text
- Red LED indicator alarm condition
- N.O. or N.C. input configuration
- Configurable automatic or manual resetting
- Built-in buzzer
- Alarm sequence according to the ISA standard
- Alarm detection time min 20ms
- Front and remote ACK, RESET and SILENCE buttons
- Password protection for settings
- Integrated calendar clock
- Storage of the latest events
- Programmable outputs
- Configurable fail safe operation
- Modular construction from 1 to 256 alarm channels
- Communication interface RS485
- Modbus-RTU communication protocol
- Ethernet communication interface
- Modbus-TCP/IP communication protocol
- Communication protocol IEC 61850 international standard for communication in substations
- Programming via free downloadable software
- Flush mount 96x96mm housing
- Degree of protection: IP20 terminals, IP50 on front

ALARM CONCENTRATORS

Certification obtained: **EAC**
Compliant with standards: **EN 61000-6-2:2006, EN 61000-6-4, EN 61010-1**

See dimensions and wiring diagrams at the end of chapter

Compalarm C2C

TYPE		RATED AUXILIARY SUPPLY VOLTAGE	VOLTAGE INPUTS	ORDER CODE	PCS	WT
Compalarm C2C	• Alarm concentrator. • LED luminous indicator. • 12 alarms. • Flush mount 96x96mm housing • Built-in buzzer • Programming alarm sequence by dip-switch. • 2 relay outputs (alarms common and acoustic signal)	90÷250 VAC/DC	24 VAC/DC	**3CC101S**	1	0,450
		20÷60 VAC/DC	24 VAC/DC	**3CC101N**		
		90÷250 VAC/DC	48 VAC/DC	**3CC102S**		
		20÷60 VAC/DC	48 VAC/DC	**3CC102N**		
		90÷250 VAC/DC	115 VAC/DC	**3CC103S**		
		20÷60 VAC/DC	115 VAC/DC	**3CC103N**		
		90÷250 VAC/DC	230 VAC/DC	**3CC104S**		
		20÷60 VAC/DC	230 VAC/DC	**3CC104N**		
Compalarm C2C-485	• Alarm concentrator. • LED luminous indicator. • 12 alarms. • Flush mount 96x96mm housing • Built-in buzzer • Programming alarm sequence by dip-switch. • 2 relay outputs (alarms common and acoustic signal) • RS485 port	90÷250 VAC/DC	24 VAC/DC	**3CC111S**		
		20÷60 VAC/DC	24 VAC/DC	**3CC111N**		
		90÷250 VAC/DC	48 VAC/DC	**3CC112S**		
		20÷60 VAC/DC	48 VAC/DC	**3CC112N**		
		90÷250 VAC/DC	115 VAC/DC	**3CC113S**		
		20÷60 VAC/DC	115 VAC/DC	**3CC113N**		
		90÷250 VAC/DC	230 VAC/DC	**3CC114S**		
		20÷60 VAC/DC	230 VAC/DC	**3CC114N**		
Compalarm C2C-EthWeb	• Alarm concentrator. • LED luminous indicator. • 12 alarms. • Flush mount 96x96mm housing • Built-in buzzer • Programming alarm sequence by dip-switch. • 2 relay outputs (alarms common and acoustic signal) • RS485 port and ethernet port for Modbus TCP/IP.	90÷250 VAC/DC	24 VAC/DC	**3CC121S**		
		20÷60 VAC/DC	24 VAC/DC	**3CC121N**		
		90÷250 VAC/DC	48 VAC/DC	**3CC122S**		
		20÷60 VAC/DC	48 VAC/DC	**3CC122N**		
		90÷250 VAC/DC	115 VAC/DC	**3CC123S**		
		20÷60 VAC/DC	115 VAC/DC	**3CC123N**		
		90÷250 VAC/DC	230 VAC/DC	**3CC124S**		
		20÷60 VAC/DC	230 VAC/DC	**3CC124N**		

GENERAL CHARACTERISTICS

The Compalarm C2C alarm annunciator is used to inform the operator that a process has gone beyond set limits using visual and audible alarms.
The annunciator is constructed from 12 inputs channels. The C2C is equipped with a selectable features which can be accessed via dip-switch located behind the front panel. For all signal inputs it's possible to set the non alarm state to normally open or normally closed. Two output relays are located in the C2C.
Within the alarm annunciator market a common standards has been adopted by all key manufacturers and end users with regards to operational sequences. These standards are used worldwide to define the visual indication, audible alarm and the action the operator must take to control the annunciator.
The Instrument Society of America provide full details of each alarm sequence within ISA 18.1-1979 (R1992) and C2C alarm annunciator is fully compliant with the stated sequences.

- 12 inputs alarms
- Interchangeable LED indicator lights
- Green power LED indicator (ON)
- N.O. or N.C. input configuration via microswitch
- Volt-Free contacts (only for 24 VDC inputs)
- Built-in buzzer
- Alarm sequence selectable by microswitch
- Front and remote ACK, RESET, TEST and SILENCE buttons
- Relay outputs (cumulative alarms and acoustic signal)
- Configurable fail safe operation by microswitch
- Communication interface RS485
- Modbus-RTU communication protocol
- Ethernet communication interface
- Modbus-TCP/IP communication protocol
- Programming via free downloadable software
- Flush mount 96x96mm housing
- Degree of protection: IP20 terminals, IP50 on front

ALARM CONCENTRATORS

Certification obtained: **EAC**
Compliant with standards: **EN 61000-6-2:2006, EN 61000-6-4, EN 61010-1**

See dimensions and wiring diagrams at the end of chapter

Compalarm AP24

TYPE		RATED AUXILIARY SUPPLY VOLTAGE	VOLTAGE INPUTS	ORDER CODE	PCS	WT
Compalarm AP12	• Alarm concentrator. • LED luminous indicator. • 12 alarms. • Flush mount.	24 VAC/DC	24 VDC	**3CA31B**	1	-
		24 VAC/DC	24 VAC/DC	**3CA31J**		
		48÷60 VDC	48÷60 VDC	**3CA31D**		
		100÷130 VDC	100÷130 VDC	**3CA31F**		
		180÷260 VDC	180÷260 VDC	**3CA31H**		
Compalarm AP24	• Alarm concentrator. • LED luminous indicator. • 24 alarms. • Flush mount.	24 VAC/DC	24 VDC	**3CA32B**	1	-
		24 VAC/DC	24 VAC/DC	**3CA32J**		
		48÷60 VDC	48÷60 VDC	**3CA32D**		
		100÷130 VDC	100÷130 VDC	**3CA32F**		
		180÷260 VDC	180÷260 VDC	**3CA32H**		
Compalarm AP36	• Alarm concentrator. • LED luminous indicator. • 36 alarms. • Flush mount.	24 VAC/DC	24 VDC	**3CA33B**	1	-
		24 VAC/DC	24 VAC/DC	**3CA33J**		
		48÷60 VDC	48÷60 VDC	**3CA33D**		
		100÷130 VDC	100÷130 VDC	**3CA33F**		
		180÷260 VDC	180÷260 VDC	**3CA33H**		
Compalarm AP48	• Alarm concentrator. • LED luminous indicator. • 48 alarms. • Flush mount.	24 VAC/DC	24 VDC	**3CA34B**	1	-
		24 VAC/DC	24 VAC/DC	**3CA34J**		
		48÷60 VDC	48÷60 VDC	**3CA34D**		
		100÷130 VDC	100÷130 VDC	**3CA34F**		
		180÷260 VDC	180÷260 VDC	**3CA34H**		

TYPE	DESCRIPTION	ORDER CODE	PCS	WT
OPTIONS	ACK, RESET, Silence, Test alarm sequence buttons	**P**	-	-
	TEST luminous indicators (as an alternative to sequence TEST)	**T**	-	-
	R2 relay with fail safe operation	**FS**	-	-
	First Out function	**FO**	-	-
	2 acoustic outputs	**2SA**	-	-
	2 cumulative alarm outputs	**2T**	-	-

GENERAL CHARACTERISTICS

Compalarm AP allows the supervision of 12 or max 48 alarm inputs, coming from as many normally open or normally closed contacts, with the possibility of selecting the operating sequence from the most common standardized ISA sequences.

The alarm display in the 30x30 mm (or larger) customizable boxes is obtained by means of white LEDs that guarantee constant and high brightness together with low consumption, without requiring maintenance for lamp replacement. The possibility of interconnection allows the realization of surveillance systems of considerable extension.

- 12 alarms, expandable to 48
- LED indicator lights
- N.O. or N.C. input configuration via microswitch
- FIRST-OUT function configuration via microswitch (only with FO expansion module)
- Alarm sequence selectable by microswitch
- Pulsanti di ACK, TEST, RESET, SILENCE sul fronte (solo con modulo di espansione P)
- Relay outputs (cumulative alarms and acoustic signal)
- Configurable fail safe operation by microswitch (only with FS expansion module)
- Colori caselle: Rosso, Ambra, Giallo, Bianco, Verde, Blu
- Flush mount housing
- Degree of protection: IP20 terminals, IP41 on front

FLAG RELAYS

Certification obtained: **EAC**
Compliant with standards: **EN 61000-6-2:2006, EN 61000-6-4, EN 61010-1**

See dimensions and wiring diagrams at the end of chapter

CM-2T

CM-4T

CM-6T

TYPE		RATED AUXILIARY SUPPLY VOLTAGE	ORDER CODE	PCS	WT
Compalarm CM2	• Relay with mechanical flag • 2 alarms (C1, C3) • Flush mount 96x96mm housing • Output relay SA and T1	110-230-400 VAC	**3C020P**	1	0,500
		24÷48 VAC/DC	**3C020N**		
		110 VDC	**3C020L**		
Compalarm CM2-T	• Relay with mechanical flag • 2 alarms (C1, C3) • Flush mount 96x96mm housing • Association of relay inputs and outputs: Input C1 • Output relay SA Input C3 • Output relays SA and T1	110-230-400 VAC	**3C021P**		
		24÷48 VAC/DC	**3C021N**		
		110 VDC	**3C021L**		
Compalarm CM4	• Relay with mechanical flag • 4 alarms (C1, C3, C4, C6) • Flush mount 96x96mm housing • Output relays SA and T1	110-230-400 VAC	**3C022P**	1	0,500
		24÷48 VAC/DC	**3C022N**		
		110 VDC	**3C022L**		
Compalarm CM4-T	• Relay with mechanical flag • 4 alarms (C1, C3, C4, C6) • Flush mount 96x96mm housing • Association of relay inputs and outputs: Inputs C1, C3 • Output relay SA Inputs C4, C6 • Output relays SA and T1	110-230-400 VAC	**3C023P**		
		24÷48 VAC/DC	**3C023N**		
		110 VDC	**3C023L**		
Compalarm CM4-T3	• Relay with mechanical flag • 4 alarms (C1, C3, C4, C6) • Flush mount 96x96mm housing • Association of relay inputs and outputs: - Inputs C1, C3 • Output relay SA - Input C4 • Output relays SA and T2 - Input C6 • Output relays SA and T1	110-230-400 VAC	**3C024P**		
		24÷48 VAC/DC	**3C024N**		
		110 VDC	**3C024L**		
Compalarm CM6	• Relay with mechanical flag • 6 alarms (C1, C2, C3, C4, C5, C6) • Flush mount 96x96mm housing • Output relays SA, T1 and T2	110-230-400 VAC	**3C026P**	1	0,500
		24÷48 VAC/DC	**3C026N**		
		110 VDC	**3C026L**		
Compalarm CM6-T	• Relay with mechanical flag • 6 alarms (C1, C2, C3, C4, C5, C6) • Flush mount 96x96mm housing • Association of relay inputs and outputs: Inputs C1, C2, C3 • Output relay SA Inputs C4, C5, C6 • Output relays SA and T1	110-230-400 VAC	**3C028P**		
		24÷48 VAC/DC	**3C028N**		
		110 VDC	**3C028L**		
Compalarm CM6-T3	• Relay with mechanical flag • 6 alarms (C1, C2, C3, C4, C5, C6). • Flush mount 96x96mm housing • Association of relay inputs and outputs: Inputs C1, C2, C3 • Output relay SA Input C4 • Output relays SA and T2 Inputs C5, C6 • Output relays SA and T1	110-230-400 VAC	**3C027P**		
		24÷48 VAC/DC	**3C027N**		
		110 VDC	**3C027L**		

GENERAL CHARACTERISTICS

The CM series tag relays do not lose alarm information when there is no auxiliary voltage thanks to the electromagnetic holding indicators (located on the front of the instrument) which are polarized when the quantity associated with the relative input is in alarm.
The application fields of the CM series are different. They are the ideal solution for oil transformers as they can be combined with Buchholz temperature sensors.

- Up to 6 alarms
- Green power LED indicator (ON)
- Product immunity to accidental overvoltages that may occur on the alarm inputs
- They maintain the alarm signal even in the event of a power failure thanks to the electromagnetic indicators
- Front and remote ACK, RESET, TEST
- Relay outputs (cumulative alarms and acoustic signal)
- Flush mount 96x96mm housing
- Degree of protection: IP20 terminals, IP50 on front

ALARM SYSTEMS WITH SEPARATE COMPONENTS FOR RACK MOUNTING

Certification obtained: **EAC**
Compliant with standards: **EN 61000-6-2:2006, EN 61000-6-4, EN 61010-1**

Vedi ingombri e schemi elettrici a fine capitolo

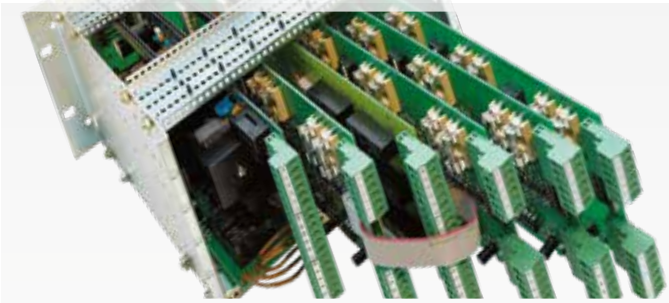

Compalarm A

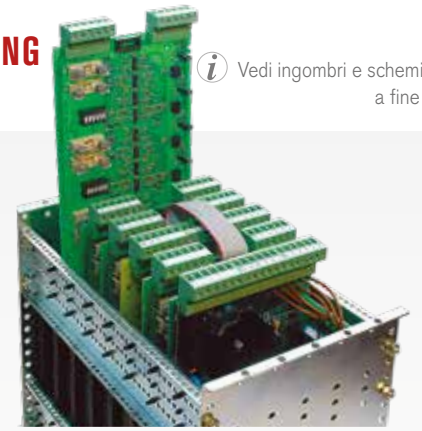

TYPE		ORDER CODE	PCS	WT
Compalarm A	**CARDS HOLDER**			
	Card holder 4 +1 locations	3CA001	-	-
	Card holder 7 +1 locations	3CA002	-	-
	Card holder 11 +1 locations	3CA003	-	-
	Card holder 15 +1 locations	3CA004	-	-
	Card holder 4 locations (with interconnection card)	3CA005	-	-
	Card holder 7 locations (with interconnection card)	3CA006	-	-
	Card holder 11 locations (with interconnection card)	3CA007	-	-
	Card holder 15 locations(with interconnection card)	3CA008	-	-
	ALARM CARDS			
	6 alarm points, ISA A alarm sequence	3CA020	-	-
	6 alarm points, ISA M alarm sequence	3CA022	-	-
	4 alarm points, ISA R8 alarm sequence	3CA024	-	-
	4 alarm points, ISA F3A alarm sequence	3CA025	-	-
	6 alarm points, configurable alarm sequence (A, F1A, F3A, F1M, M, M5, R8) with RS485 port	3CA035	-	-
	RELAY CARDS			
	6 relays, without memory	3CA041	-	-
	6 relays, with memory	3CA044	-	-
	6 relays, with memory and re-flash pulse	3CA045	-	-
	TRANSFORMERS			
	110-230-400 VAC / 24 VAC - 50VA	3CA060	-	-
	110-230-400 VAC / 24 VAC - 100VA	3CA061	-	-
	110-230-400 VAC / 24 VAC - 150VA	3CA062	-	-
	110-230-400 VAC / 24 VAC - 200VA	3CA063	-	-
	110-230-400 VAC / 24 VAC - 250VA	3CA064	-	-
	110-230-400 VAC / 24 VAC - 300VA	3CA064	-	-
	POWER CONVERTERS			
	48 VDC / 24 VDC • 30W with flasher card	3CA0794	-	-
	110 VDC / 24 VDC • 30W with flasher card	3CA0793	-	-
	48 VDC / 24 VDC • 100W with flasher card	3CA076	-	-
	110 VDC / 24 VDC • 100W with flasher card	3CA079	-	-
	220 VDC / 24 VDC • 100W with flasher card	3CA0791	-	-
	48 VDC / 24 VDC • 250W with flasher card	3CA073	-	-
	110 VDC / 24 VDC • 250W with flasher card	3CA069	-	-
	220 VDC / 24 VDC • 250W with flasher card	3CA067	-	-
	POWER SUPPLY AND FLASHER CARD			
	RATED AUXILIARY SUPPLY VOLTAGE 24 VDC - 2FT-VDC	3CA010	-	-
	RATED AUXILIARY SUPPLY VOLTAGE 24 VAC/DC - 2FT-VAC	3CA011		

GENERAL CHARACTERISTICS

The Compalarm A system has a modular design (expandable rack mounting) and can be used to display alarms for immediate action and / or for subsequent analysis.
The presence of an RS485 serial port (optional) allows system control and connection with Modbus RTU protocol to acquisition systems (PLC, SCADA, Computer, etc.). Compalarm A systems are built using standard racks with front access to associated logic boards and connection terminals. All terminals are suitable for a maximum of 2.5 mm2 of wire and each terminal block can be removed to facilitate installation.

The alarm system consists of:
- rack chassis (base unit)
- chassis rack (expansion uni if applicable)
- alarm input cards
- relay repetition cards
- pulse card
- power supply board
- SQ series display panel

Any combination of input or relay cards can be used to suit individual applications. Compalarm A is also equipped with an RS-485 interface with Modbus-RTU protocol to allow integration into supervisory systems.

SQ PANEL INDICATOR

Certification obtained: **EAC**
Compliant with standards: **EN 61000-6-2:2006, EN 61000-6-4, EN 61010-1**

Vedi ingombri e schemi elettrici a fine capitolo

SQ
panel indicator

TYPE		ORDER CODE	PCS	WT
SQ Panel indicator	**PANEL INDICATOR**			
	24÷30 V (in combination with Compalarm A alarm system)	**SQ ***	1	-
	* *Number of display windows (number of lines x number of columns)* **Maximum number of lines = 10** **Maximum number of columns = 20**			

GENERAL CHARACTERISTICS

The indicators of the SQ series are available in the version with 30x30 mm base windows. The SQ series is designed to accept white or ultra-bright LEDs. With the same it is possible to reach a maximum of 200 windows. The replacement of the lamp and the LEDs takes place from the front of the panel.

Window dimensions:
- 30x30 mm
- 60x30 mm
- 60x60 mm

- Maximum number of boxes 200 (30x30 mm)
- Available colors: red, amber, yellow, white, green, blue
- LED or ultra-bright LED lamp
- Degree of protection: IP41

DEVICES FOR CONTROL AND SUPERVISION THROUGH WIFI AND CELLULAR CONNECTIONS

Certification obtained: **EAC**

See dimensions and wiring diagrams at the end of chapter

Compliant with standards: **EN 62368-1, EN 62311, EN 55032, EN 55035, EN 301 489-1, EN 301 489-17, EN 301 489-52, EN 300 328, EN 301 511, EN 301 908-2, EN 301 908-13, EN55032 Class B, EN55032 Class A**

IoT SYSTEM

Compalarm GW-104

TYPE		RATED AUXILIARY SUPPLY VOLTAGE	ORDER CODE	PCS	WT
Compalarm GW-104	• 4 DIN modular device for control and supervision through WiFi and cellular connections. • Remote & local control. • 6 digital inputs, 4 analog inputs, 4 relay outputs. • Integrated WebServer. • Modbus • Notice to recipients on local event (SMS, Call, Email, Chat, HTTP, MQTT ..)	85÷264 VAC	**3CG80S**	1	0,200
		9÷27 VAC, 9÷35 VDC	**3CG80J**		

GENERAL CHARACTERISTICS

GW-104 is a DIN rail device for control and supervision through WiFi and cellular connections. **GW-104** can work as a passive input and output module, managed with remote commands (CLOUD) or as a programmable controller that produces actions in response to events. **GW-104** has a rich set of inputs, outputs and communication CHANNELS, each of which can be disabled or enabled and generate events:

- Six digital inputs with time counter and pulse counter functions
- Four software configurable analog inputs
- Four relay output contacts
- Infrared transmitter and receiver
- Com port
- Local and remote expandability
- Double power supply with surveillance and hour counter
- Backup battery with monitoring and operating hour counter
- Interface for SD cards up to 32 GB
- Remote update

GW-104 can receive commands via email, chat messages, HTTP.
All units are equipped with WiFi and Bluetooth connectivity. Additional functions are available for units with cellular connectivity for 2G 3G and 4G networks:

- Sending and receiving SMS
- Sending and receiving telephone calls
- Playing audio files during a phone call
- Detection of keys pressed during a call
- Alternative connectivity in case of WiFi unavailability

EXPANSION MODULE

Certification obtained: **EAC**
Compliant with standards: **EN 61000-6-2:2006, EN 61000-6-4, EN 61010-1**

See dimensions and wiring diagrams at the end of chapter

MR-R8

TYPE		RATED AUXILIARY SUPPLY VOLTAGE	ORDER CODE	PCS	WT
MR-R8	• Expansion module with 8 independent relay outputs each with changeover contact • Modular DIN-rail housing, 6U • Configurable fail safe operation by microswitch • RS485 port	90÷250 VAC/VDC	**3MR13S**	1	0,300
		20÷60 VAC/VDC	**3MR21N**	1	0,300

GENERAL CHARACTERISTICS

The MR-R8 module includes 8 relay outputs independent of each other. This module can also be connected to Contrel elettronica devices equipped with RS485 communication interface.
The outputs functionalities are done directly from the proper instrument menu in an easy way.
The MR-R8 is also provided with a RS-485 interface with Modbus protocol to consent the integration in supervision systems. The communication set-up is done directly from the proper setting dip switch.

- 8 relay outputs (complete exchange)
- Green power supply signaling LED (ON)
- Red LED for signaling output activated
- Operation with settable positive safety
- RS485 communication interface
- Modbus-RTU communication protocol
- 6-module modular container
- Degree of protection: IP20 terminals; IP40 front

EXPANSION MODULE

Certification obtained: **EAC**
Compliant with standards: **EN 61000-6-2:2006, EN 61000-6-4, EN 61010-1**

See dimensions and wiring diagrams at the end of chapter

MR-DI16

TYPE		RATED AUXILIARY SUPPLY VOLTAGE	VOLTAGE INPUTS	ORDER CODE	PCS	WT
MR-DI16	• Expansion module with 16 digital inputs • Modular DIN-rail housing, 6U • RS485 port	90÷250 VAC/DC	24 VAC/DC	**3MR301S**	1	0,300
		20÷60 VAC/DC	24 VAC/DC	**3MR301N**		
		90÷250 VAC/DC	48 VAC/DC	**3MR302S**		
		20÷60 VAC/DC	48 VAC/DC	**3MR302N**		
		90÷250 VAC/DC	115 VAC/DC	**3MR303S**		
		20÷60 VAC/DC	115 VAC/DC	**3MR303N**		
		90÷250 VAC/DC	230 VAC/DC	**3MR304S**		
		20÷60 VAC/DC	230 VAC/DC	**3MR304N**		

GENERAL CHARACTERISTICS

The MR-DI16 module includes 16 isolated digital inputs. This module can also be connected to Contrel elettronica devices equipped with an RS485 communication interface where a greater number of inputs is required. It is possible to configure each input as normally open or normally closed, through the relative dip-switches.

The MR-DI16 is also provided with a RS-485 interface with Modbus protocol to consent the integration in supervision systems. The communication set-up is done directly from the proper setting dip switch.

- 16 digital inputs
- Yellow LED for signaling data traffic on the RS485 serial
- Modbus-RTU communication protocol
- Green power supply signaling LED (ON)
- Configuration of inputs N.A or N.C. via microswitch
- 6-module modular container
- Red LED for signaling input status
- RS485 communication interface
- Degree of protection: IP20 terminals; IP40 front

ALARM CONCENTRATORS AND TEMPERATURE CONTROL UNIT | dimensions (mm)

Temperature control units

CTT-4 - CTT-8

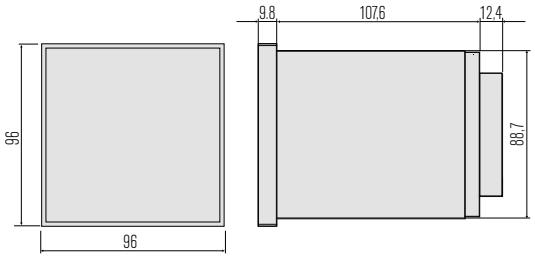

Luminous indicators

C0.3/sq - C0.4/sq

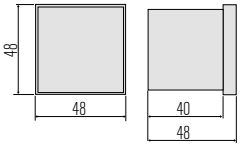

C2/sq

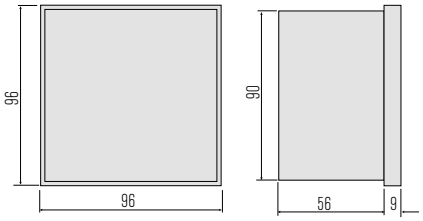

C3/sq

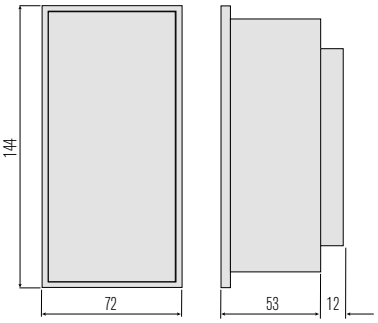

Alarm concentrators

COMPALARM D2 - COMPALARM C2C

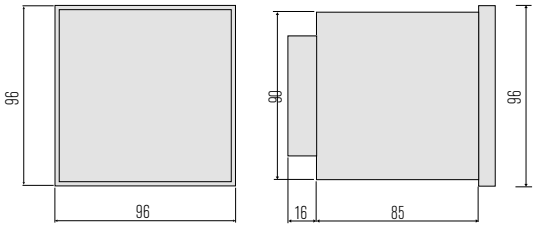

COMPALARM E

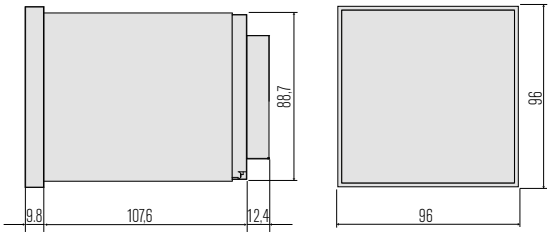

COMPALARM AP

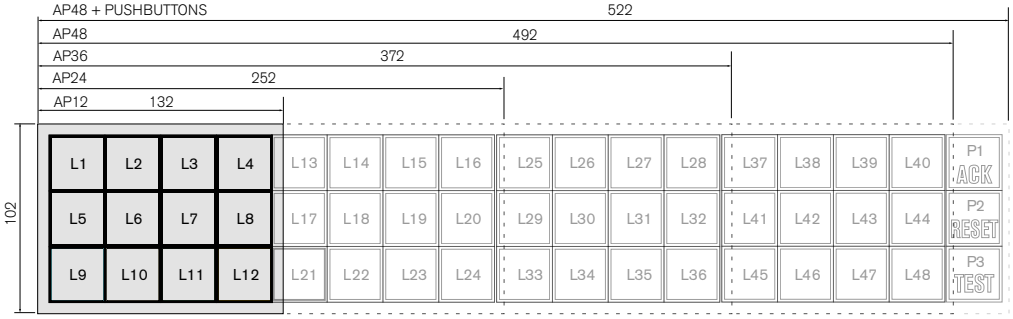

FLAG RELAYS

COMPALARM D2m

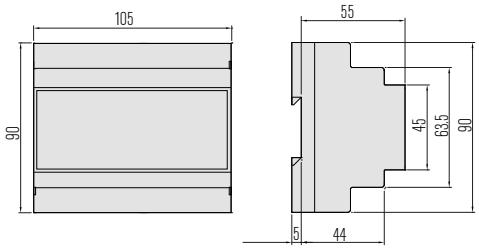

COMPALARM CM

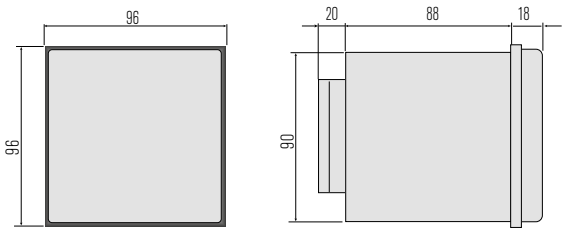

ALARM CONCENTRATORS AND TEMPERATURE CONTROL UNIT | dimensions (mm)

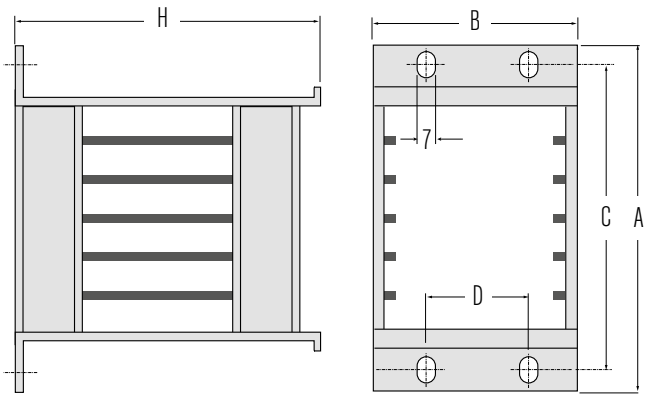

CARDS HOLDER					
TYPE	A	B	C	D	H
CH4 / CH5	200	132,5	183	57	200
CH7 / CH8	270	132,5	253	57	200
CH11 / CH12	375	132,5	360	57	200
CH15 / CH16	484	132,5	467	57	200

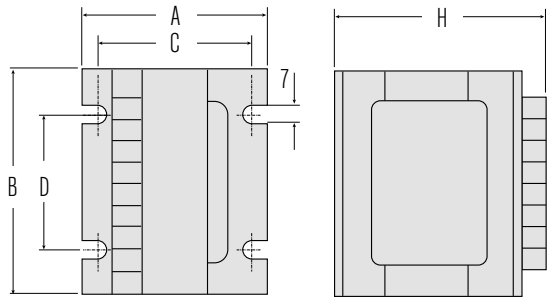

TRANSFORMERS					
TYPE	A	B	C	D	H
TR5	80	85	70	60	95
TR10	85	85	70	60	95
TR15	86	85	70	60	95
TR20	86	85	70	60	95
TR25	86	85	70	60	95
TR30	100	85	70	60	95

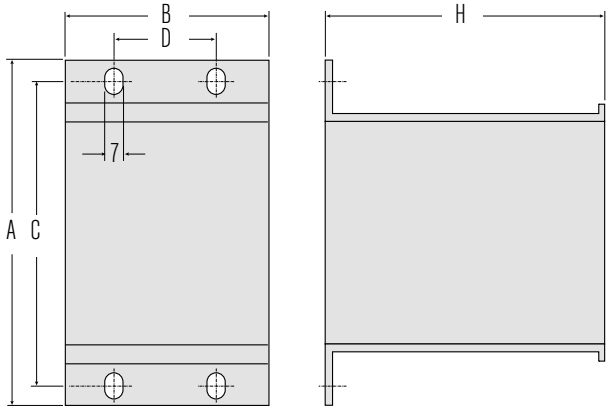

POWER CONVERTERS					
TYPE	A	B	C	D	H
DC3F-48/110/220	Esecuzione su scheda				
DC10F-48/110/220	Esecuzione su scheda				
DC25 - 48	200	132,5	183	57	200
DC25 - 110	200	132,5	183	57	200
DC25 - 220	200	132,5	183	57	200

DEVICES FOR CONTROL AND SUPERVISION THROUGH WIFI AND CELLULAR CONNECTIONS

COMPALARM GW-104

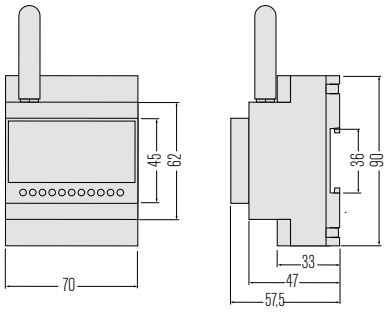

EXPANSION MODULES

MR-R8 – MR-DI16

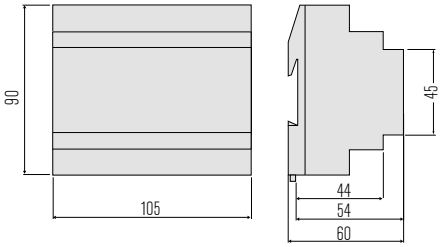

TEMPERATURE CONTROL UNITS

CTT-4

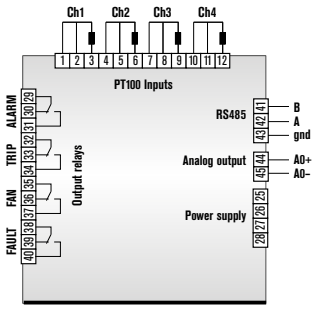

CTT-4-4AO

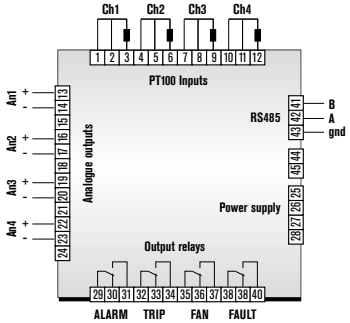

CTT-8

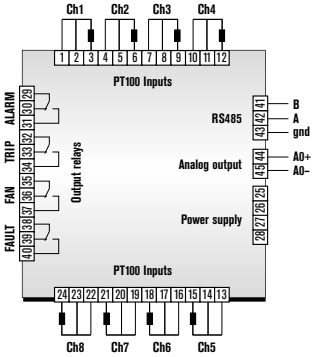

ALARM CONCENTRATORS

COMPALARM D2

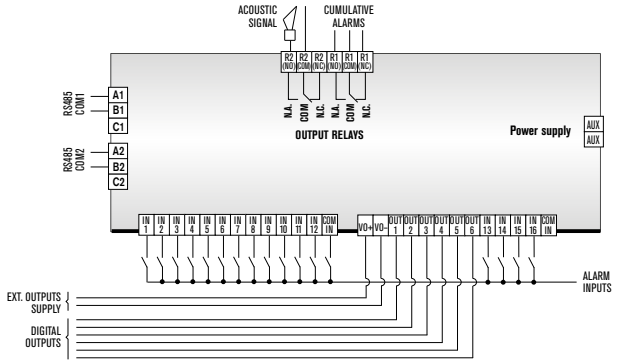

COMPALARM D2m

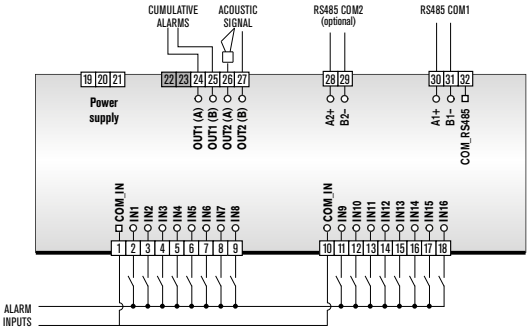

COMPALARM E
Volt-Free contacts (24 VDC ONLY)

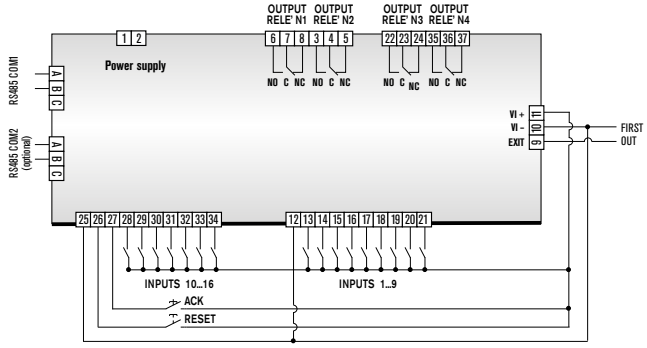

COMPALARM E
Higher Voltage Powered Inputs

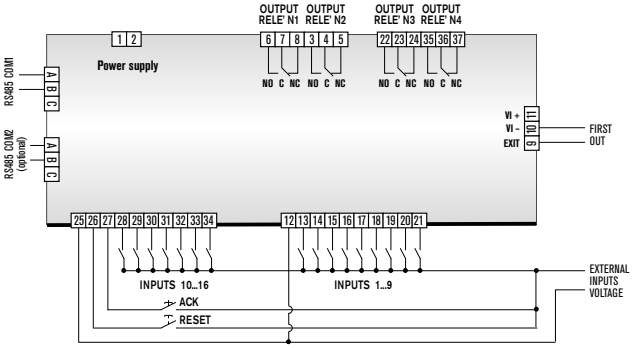

ALARM CONCENTRATORS

COMPALARM C2C
Volt-Free contacts (24 VDC ONLY)

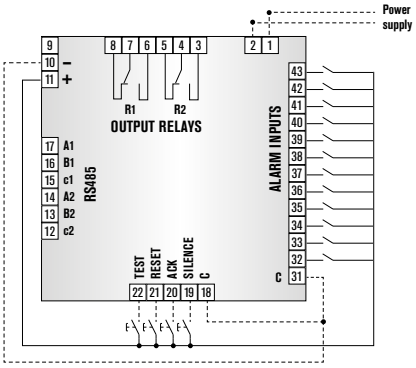

COMPALARM C2C
Higher Voltage Powered Inputs

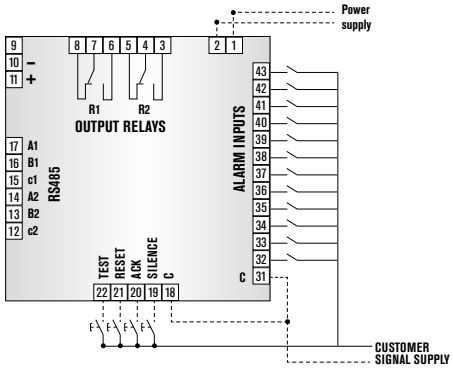

COMPALARM AP

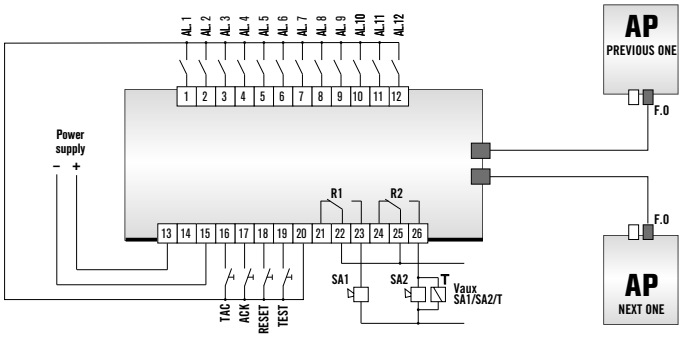

FLAG RELAYS

COMPALARM CM2 | CM2-T

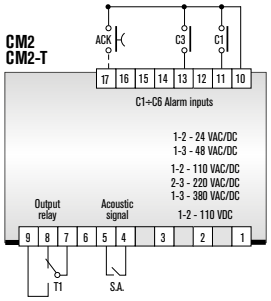

COMPALARM CM4

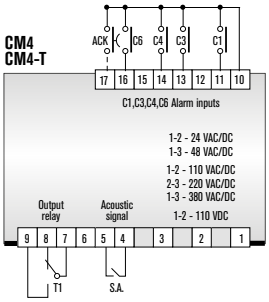

COMPALARM CM4-T | CM4-T3

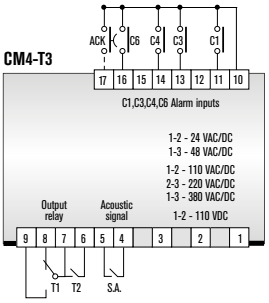

COMPALARM CM6-T

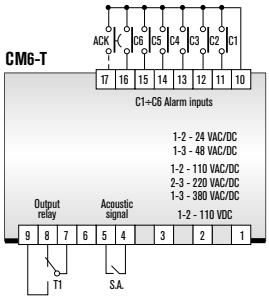

COMPALARM CM6-3 | CM6-T3

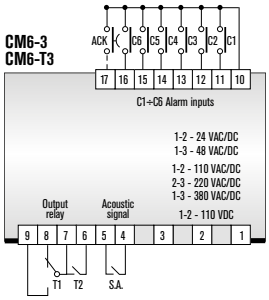

contrel elettronica

ALARM SYSTEMS WITH SEPARATE COMPONENTS FOR RACK MOUNTING

COMPALARM A

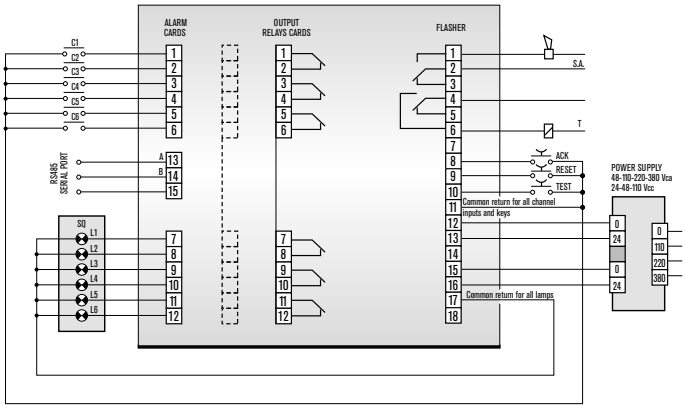

DEVICES FOR CONTROL AND SUPERVISION THROUGH WIFI AND CELLULAR CONNECTIONS

COMPALARM GW-104

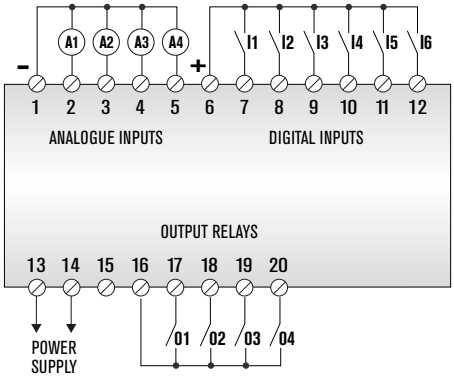

EXPANSION MODULES

MR-R8

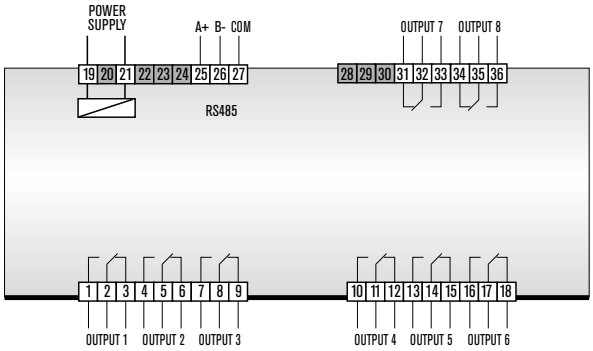

MR-DI16

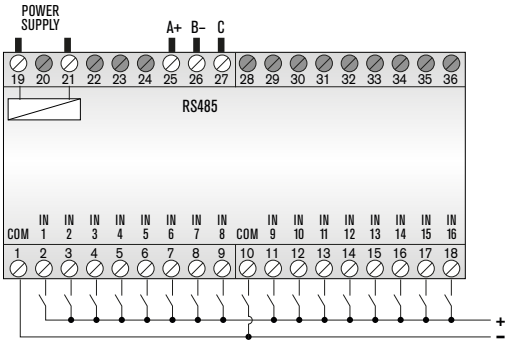

COMPALARM **A** | COMPALARM **AP** | COMPALARM **E** | COMPALARM **C2C**

Each alarm channel can be configured to suit the required operating sequence as listed in the ISA publication "Annunciator Sequences and Specifications S18.1 1979 (R1985).

The systems can be configured with different functions on different alarm modes.

The following diagrams show the sequences used by the Contrel announcers.

SEQUENCE A | AUTOMATIC RESET

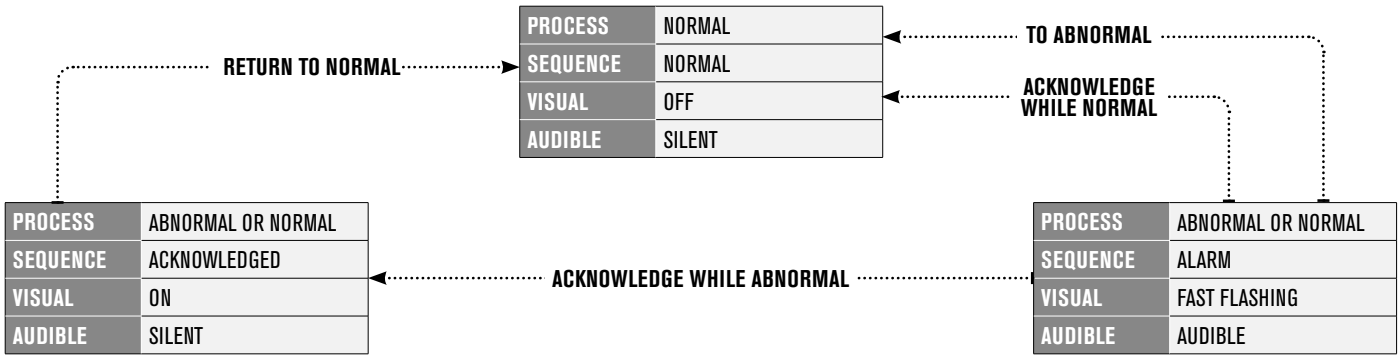

SEQUENCE M | MANUAL RESET

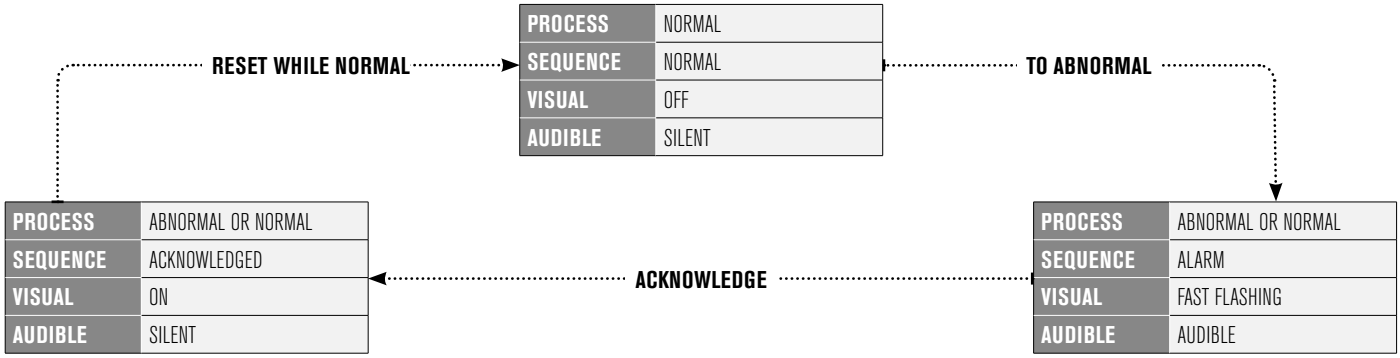

SEQUENCE R | RINGBACK

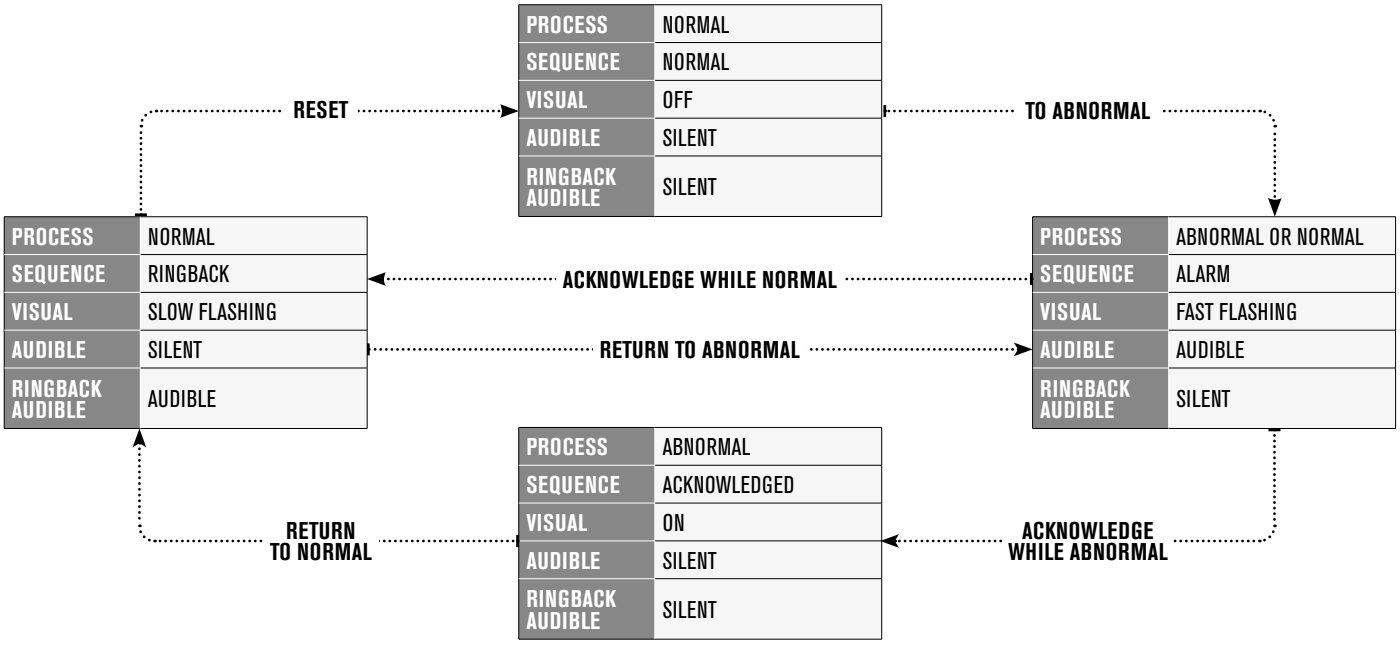

SEQUENCE F1A | AUTOMATIC RESET FIRST OUT WITH NO SUBSEQUENT ALARM STATE

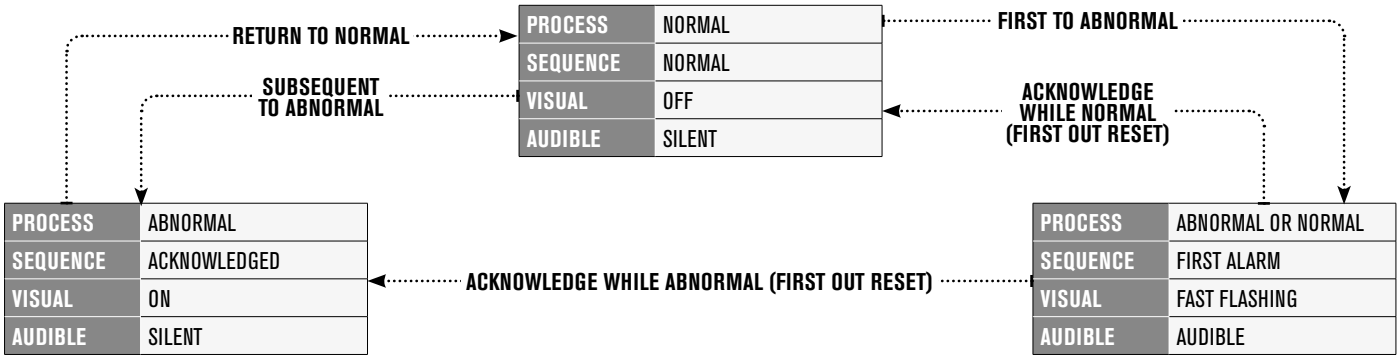

SEQUENCE F1M | MANUAL RESET FIRST OUT WITH NO SUBSEQUENT ALARM STATE

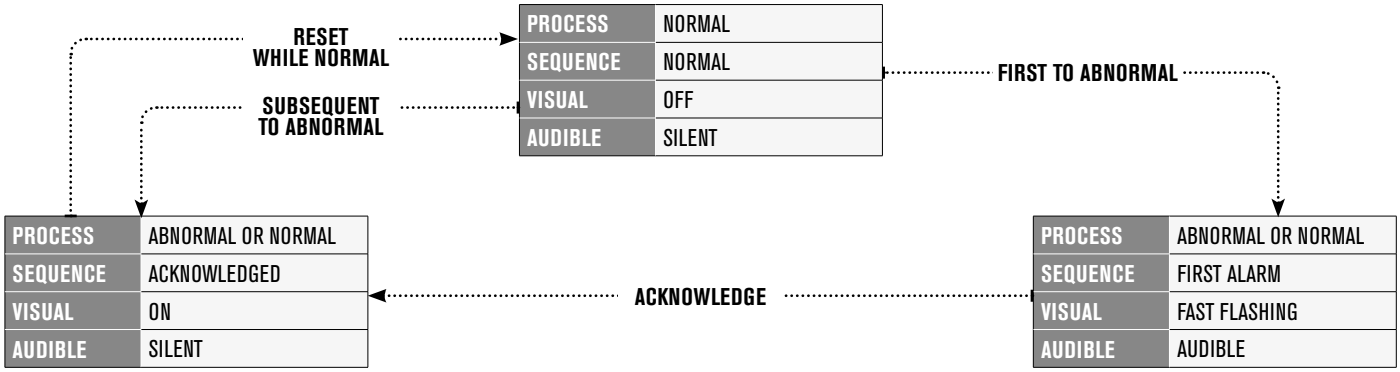

SEQUENCE F2A | AUTOMATIC RESET FIRST OUT WITH NO SUBSEQUENT ALARM FLASHING

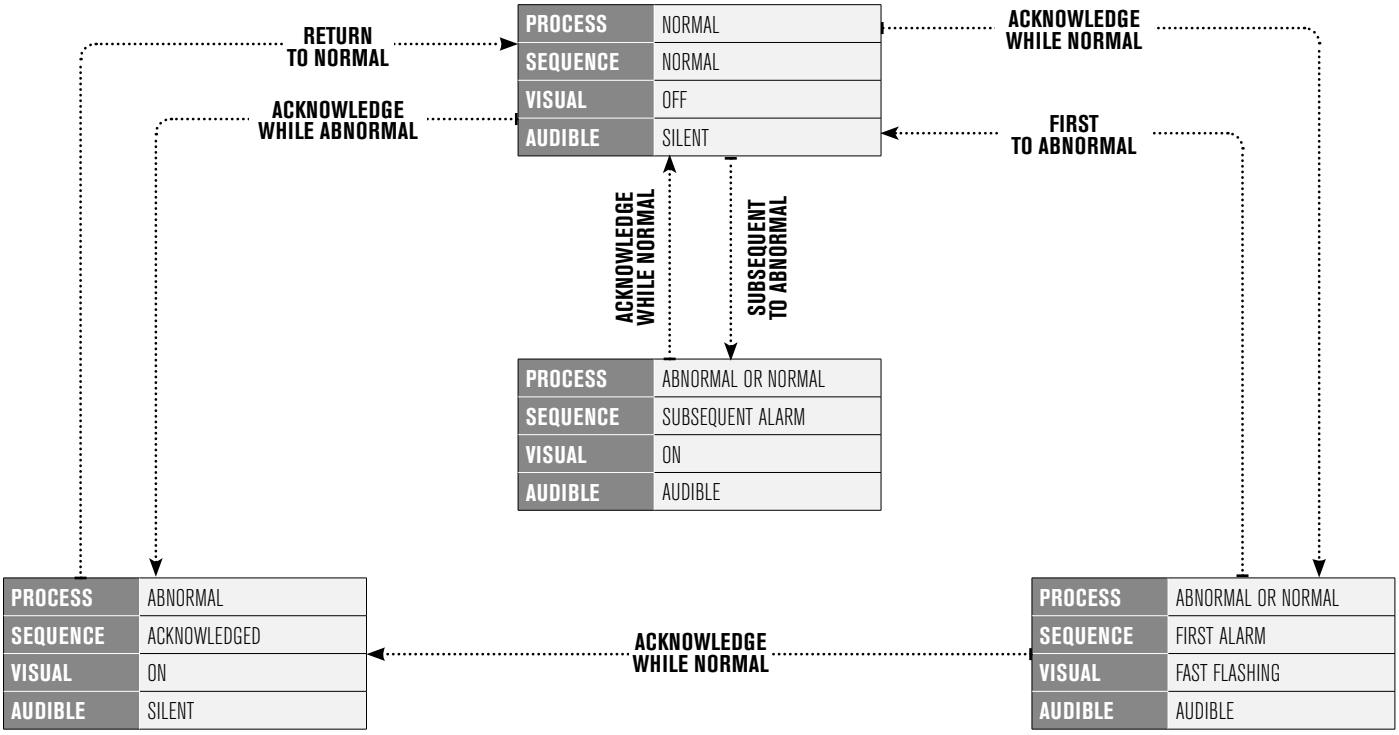

SEQUENCE F2M | MANUAL RESET FIRST OUT WITH NO SUBSEQUENT ALARM FLASHING

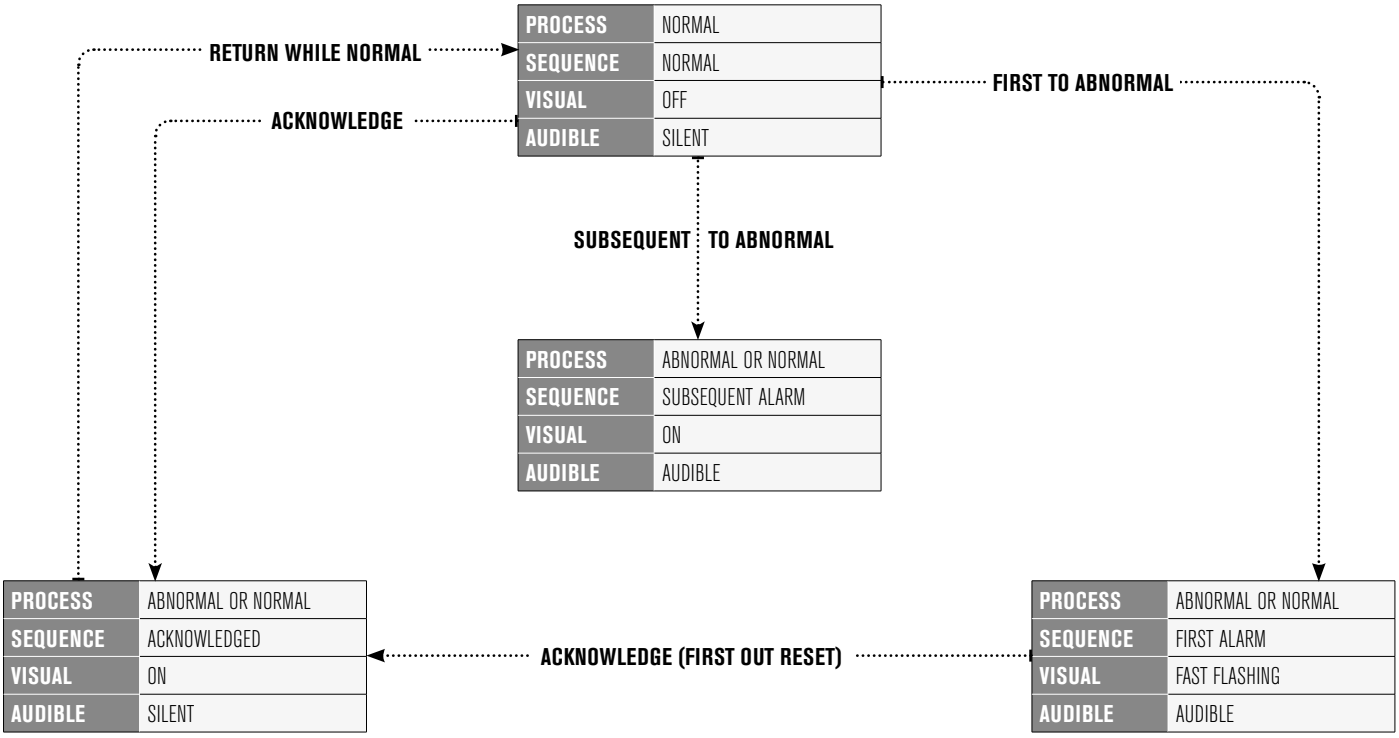

contrel elettronica

SEQUENCE F3A | AUTOMATIC RESET FIRST OUT WITH FIRST OUT FLASHING AND RESET PUSHBUTTON

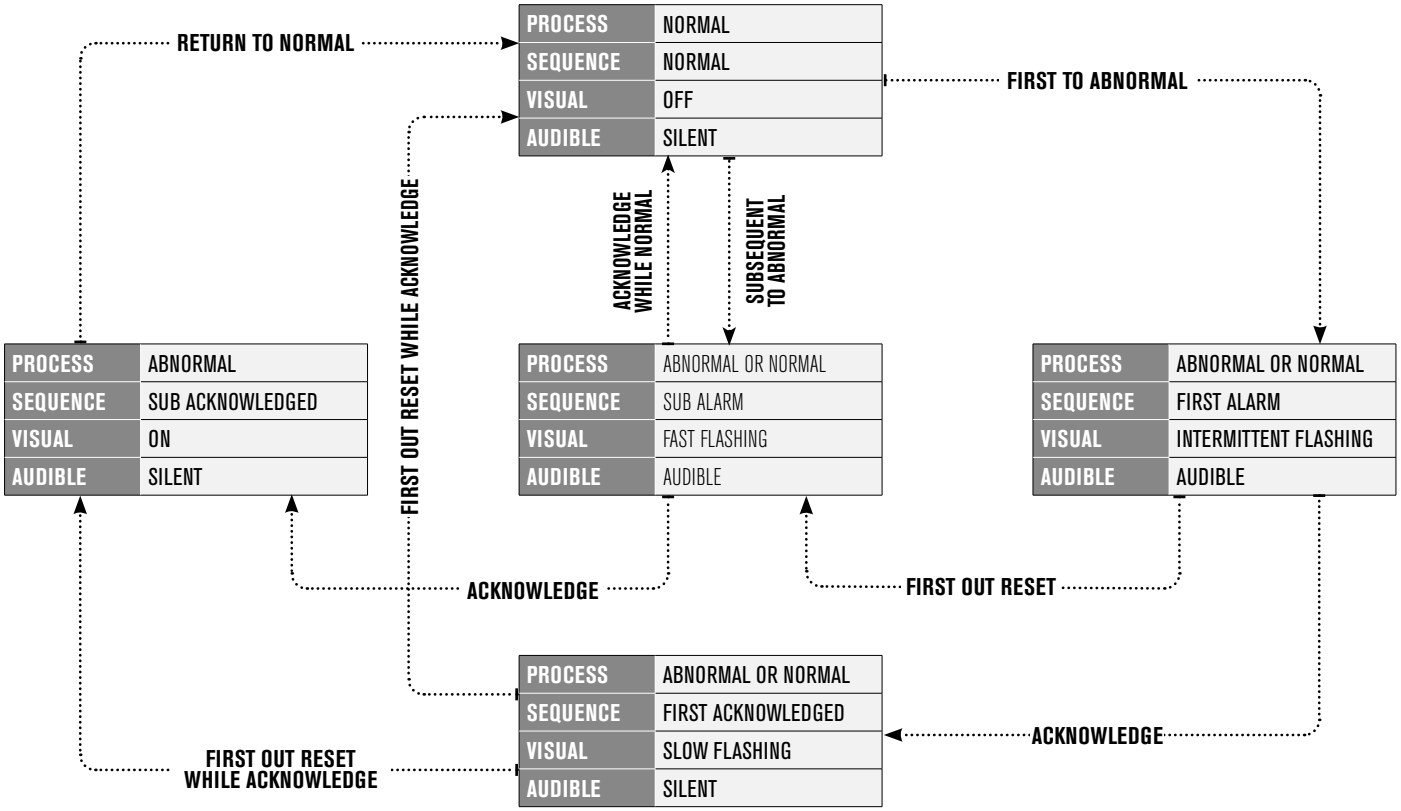

SEQUENCE F3M | MANUAL RESET FIRST OUT WITH FIRST OUT FLASHING AND RESET PUSHBUTTON

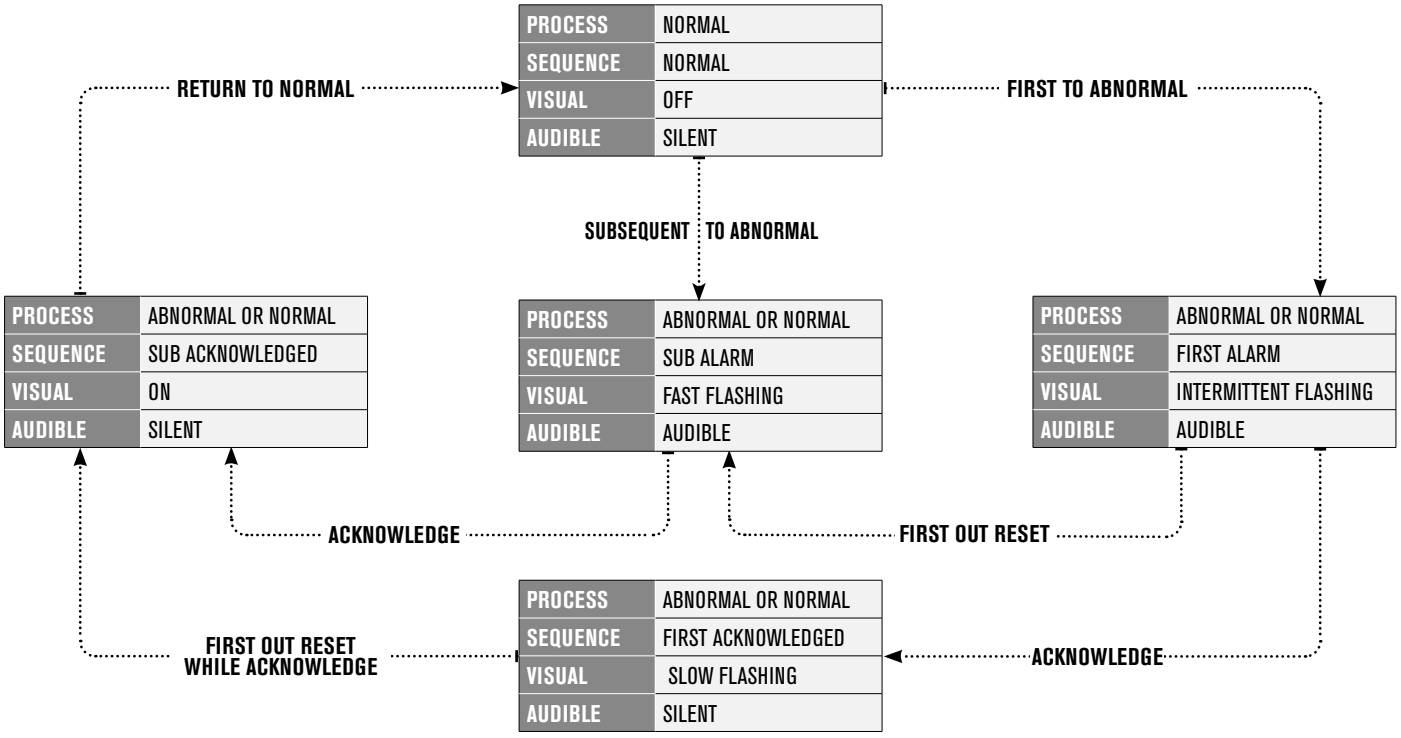

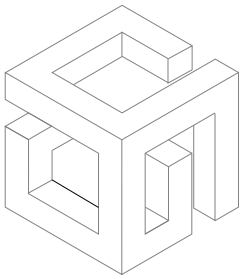

contrel elettronica

According to the copyright and the civil law,
the reproduction of this catalogue,
or any part of this one, by electronic,
mechanical methods, by means of photocopies,
microfilms, recordings or other, is peremptorily forbidden.

Rights are reserved for all countries.
Drawings, specifications and reference numbers
may be modified and changed. CONTREL elettronica s.r.l
reserves it self the right, to make changes
for technical or quality improvements, without any notice.

GRAPHIC PROJECT STUDIO MASSIMO COVATI

contrel elettronica

CONTREL elettronica s.r.l.
Via San Fereolo, 9
26900 LODI Italia
Tel. +39.0371.30207
contrel@contrel.it
contrel@contrel.eu

www.contrel.it

© CONTREL ELETTRONICA SRL - THE RIGHTS ARE RESERVED FOR ALL COUNTRIES